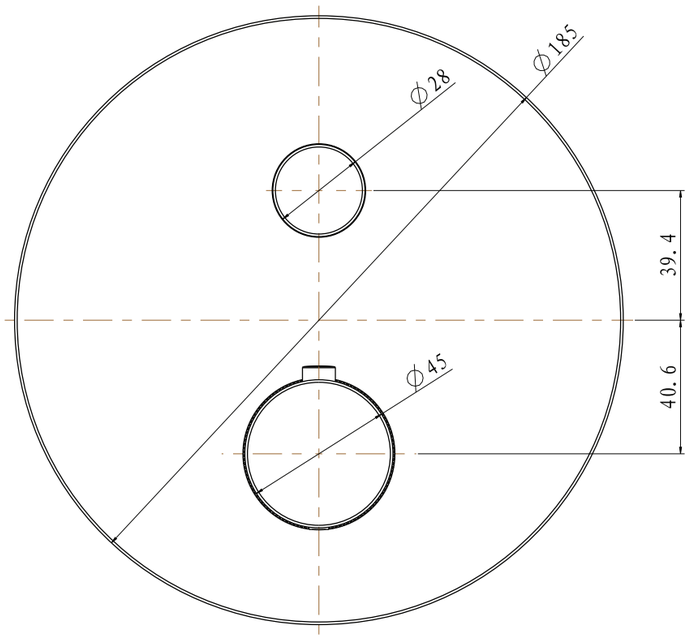
Ø28
Ø185
39.4
40.6
Ø45

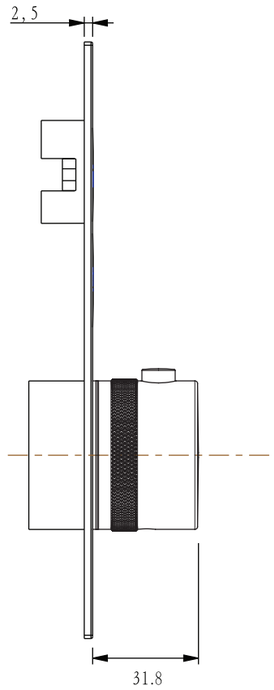
2.5
31.8

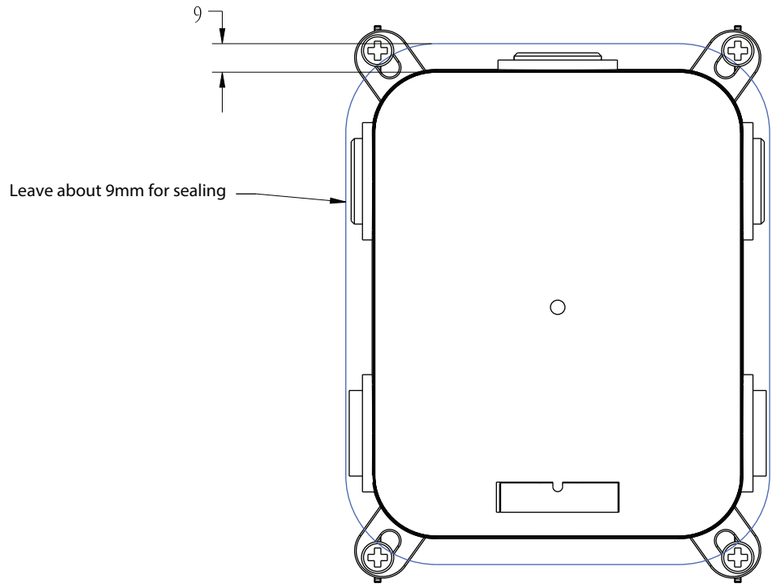
9
Leave about 9mm for sealing

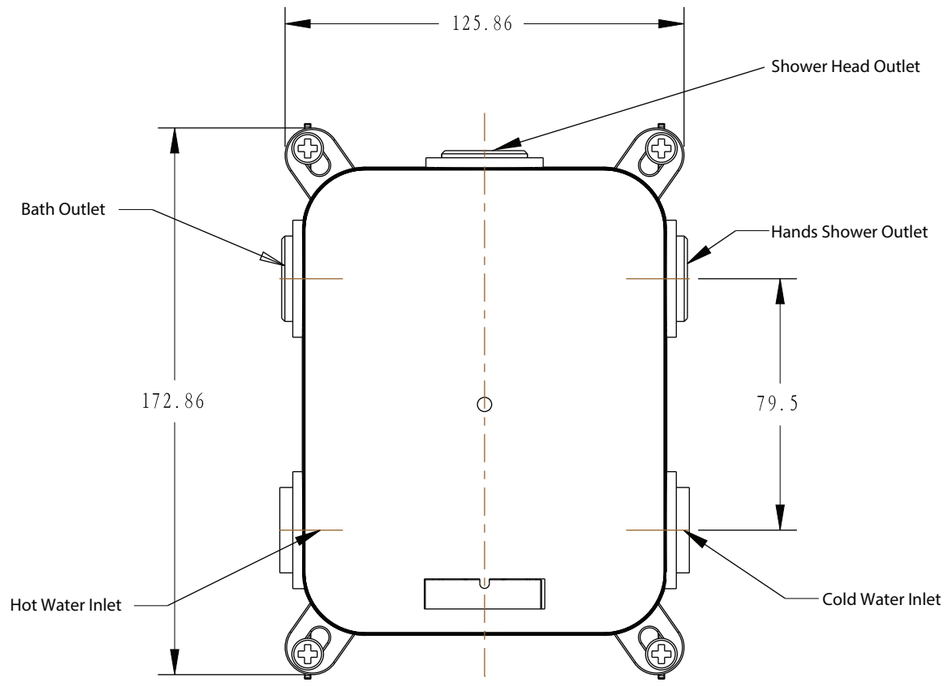
125.86
Shower Head Outlet
Bath Outlet
Hands Shower Outlet
172.86
79.5
Hot Water Inlet
Cold Water Inlet

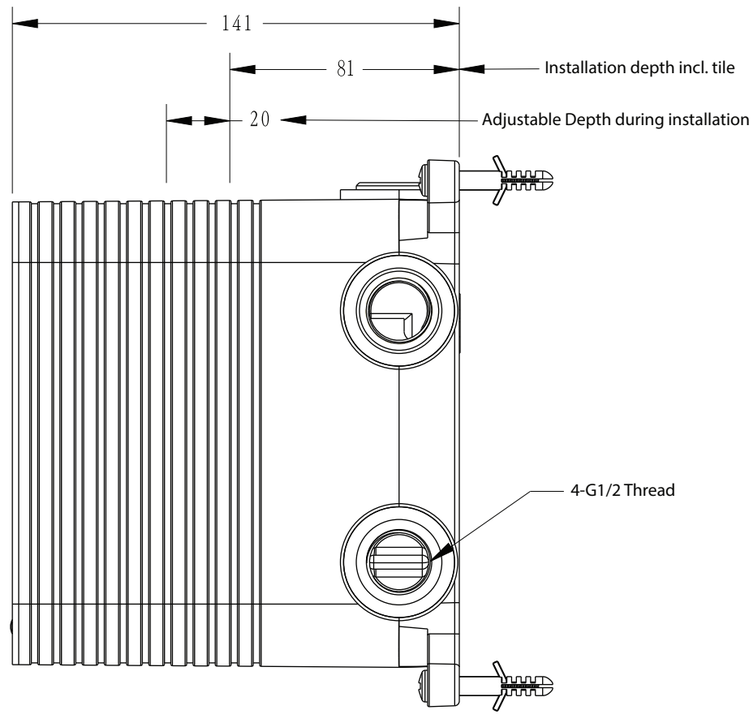
141
81
Installation depth incl. tile
20
Adjustable Depth during installation
4-G1/2 Thread